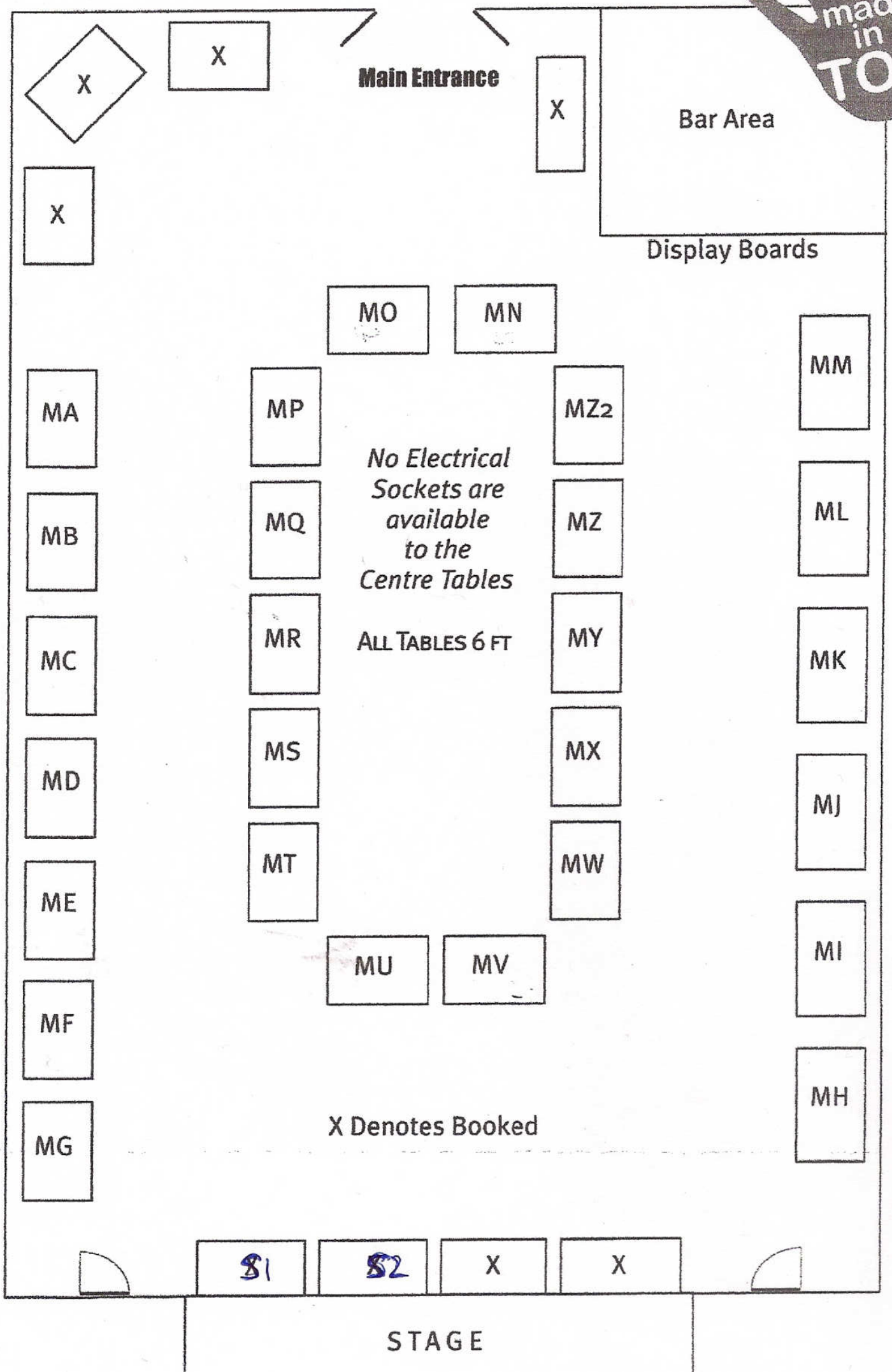TOWN HALL - MAIN HALL